X 30115 8BB
X 30116 8BG
X 30117 8BP
X 30118 8BC

8 String Bridge Top Part

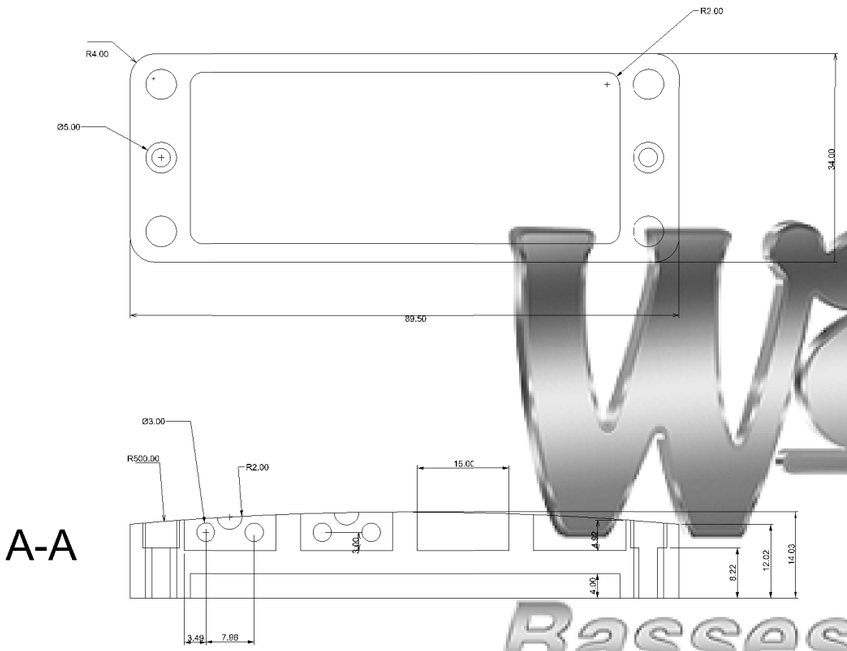

8 String Bridge Bottom

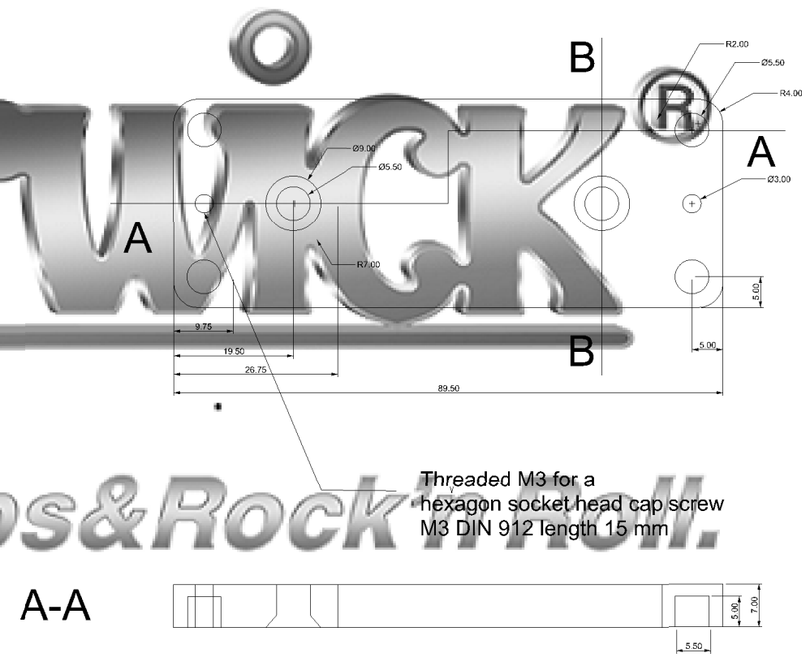

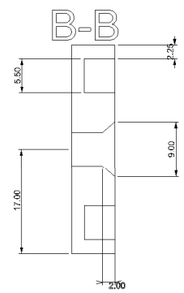

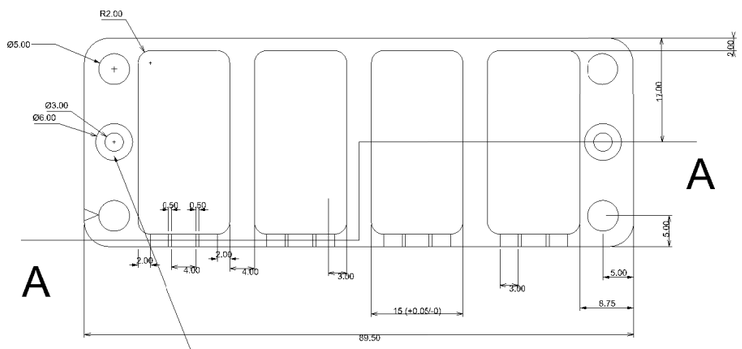

Threaded M5 for a Hexagon
socket (2.5mm) set screw
with cup point
M5 DIN 916 length 15 mm

Warwick Gmbh & Co Music Equipment KG
Gewerbepark 46
D-08258 Markneukirchen
Tel : +49 (0) 37422 555 - 0
Fax : +49 (0) 37422 555- 9999
e-mail : info@warwick.de

	NAME	DATE DATE
DRAWN		29.09.2016
Unless noted, all measurements are given in millimeters		
Scale 1:1	SHEET 1 OF 2	A3

8 String Warwick 3 D Bridge

Brass

Copyright
This drawing is the property of Warwick Gmbh & Co Music Equipment KG.
The information given on it is protected by copyright and any form of copying or reproduction is stricly forbidden.